FEMA ELECTRONICS CORPORATION

3mm Super Blue LED

P/N: L300BC4-L

Description

LED Chip		Lens Color
Material	Emitting Color	
InGaN/Sapphire	Blue	Water clear

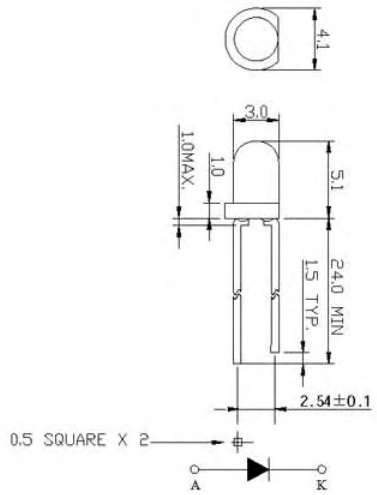

Notes:

1. ALL DIMENSIONS ARE IN mm.
2. TOLERANCE IS ±0.25mm UNLESS OTHERWISE NOTED.

Absolute Maximum Ratings at Ta=25℃

Parameter	Symbol	Rating	Unit
Power Dissipation	P_D	120	mW
Reverse Voltage	V_R	5	V
D.C. Forward Current	If	30	mA
Reverse (Leakage) Current	Ir	50	μA
Peak Current(1/10Duty Cycle,0.1ms Pulse Width.)	If(Peak)	100	mA
Operating Temperature Range	Topr.	-25 to +85	℃
Storage Temperature Range	Tstg.	-40 to +100	℃
Lead Soldering Temp.(1.6mm from body) for 5 seconds	Tsol.	260	℃
Electrostatic discharge	ESD.	6000	V

Electrical and Optical Characteristics:

Parameter	Symbol	Condition	Min.	Typ.	Max.	Unit
Luminous Intensity	Iv	If=20mA	270	700		mcd
Forward Voltage	Vf	If=20mA		3.2	4.0	V
Peak Wavelength	λP	If=20mA				nm
Dominant Wavelength	λD	If=20mA		465		nm
Reverse (Leakage) Current	Ir	Vr=5V			50	μA
Viewing Angle	2θ1/2	If=20mA		30		deg
Spectrum Line Halfwidth	Δλ	If=20mA		26		nm

NOTE: THE DATAS TESTED BY IS TESTER

Typical Electrical / Optical Characteristics Curves :

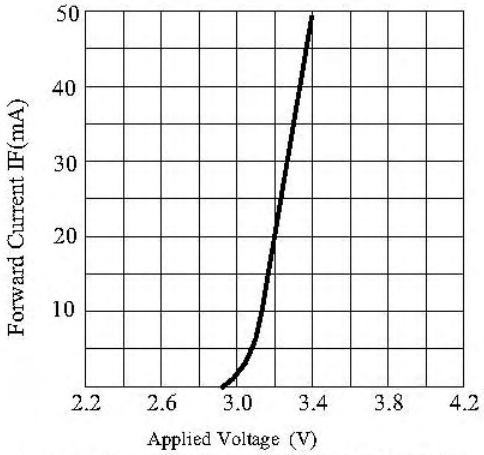

FORWARD CURRENT VS.APPLIED VOLTAGE

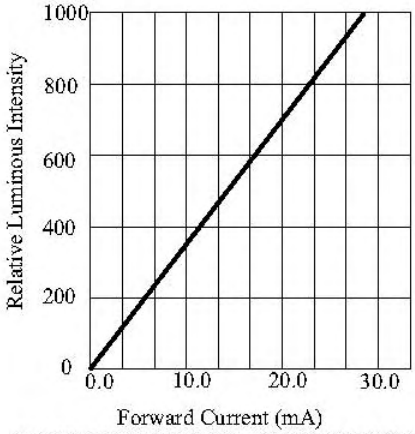

FORWARD CURRENT VS. LUMINOUS INTENSITY

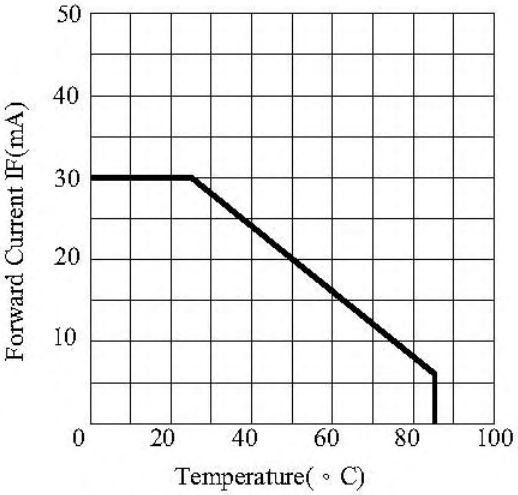

FORWARD CURRENT VS. AMBIENT TEMPERATURE

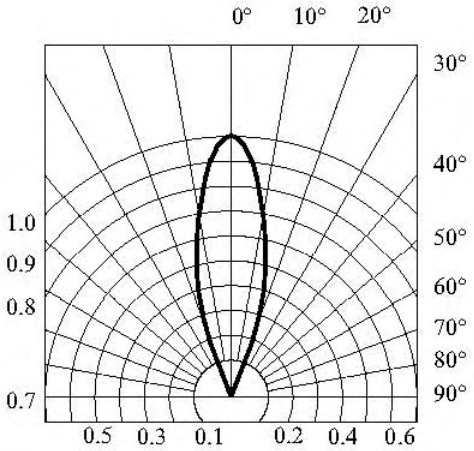

RADIATION DIAGRAM

Precautions:

TAKE NOTE OF THE FOLLOWING IN USE OF LED

1. Temperature in use

Since the light generated inside the LED needs to be emitted to outside efficiently, a resin with high light transparency is used; therefore, additives to improve the heat resistance or moisture resistance (silica gel , etc) which are used for semiconductor products such as transistors cannot be added to the resin.

Consequently, the heat resistant ability of the resin used for LED is usually low; therefore, please be careful on the following during use.

Avoid applying external force, stress, and excessive vibration to the resins and terminals at high temperature. The glass transition temperature of epoxy resin used for the LED is approximately 120-130℃.

At a temperature exceeding this limit, the coefficient of liner expansion of the resin doubles or more compared to that at normal temperature and the resin is softened.

If external force or stress is applied at that time, it may cause a wire rupture.

2. Soldering

Please be careful on the following at soldering.

After soldering, avoided applying external force, stress, and excessive vibration until the products go to cooling process (normal temperature), <Same for products with terminal leads>

(1) Soldering measurements:

Distance between melted solder side to bottom of resin shall be 1.6mm or longer.

(2) Solder dip: Preheat: 90℃ max. (Backside of PCB), Within 120 seconds

Solder bath: 250℃ max. (Solder temperature), Within 5 seconds

(3) Soldering iron : 250℃ max. (Temperature of soldering iron tip), Within 3 seconds

3. Insertion

Pitch of the LED leads and pitch of mounting holes need to be same

4. Others

Since the heat resistant ability of the LED resin is low, SMD components are used on the same PCB, please mount the LED after adhesive baking process for SMD components. In case adhesive baking is done after LED lamp insertion due to a production process reason, make sure not to apply external force, stress, and excessive vibration to the LED and follow the conditions below.

Baking temperature: 120℃ max. Baking time: Within 60 seconds

If soldering is done sequentially after the adhesive baking, please perform the soldering after cooling down the LED to normal temperature.